International
IOR Rectifier

PD - 97437A

# IRF9310PbF

HEXFET® Power MOSFET

| $V_{DS}$ | -30 | V |
|---|---|---|
| $R_{DS(on)\ max}$ (@$V_{GS}$ = 10V) | 4.6 | mΩ |
| $I_D$ (@$T_A$ = 25°C) | -20 | A |

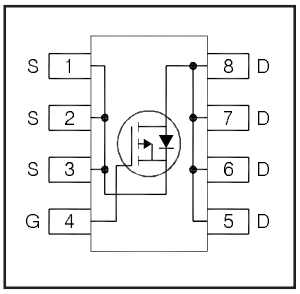


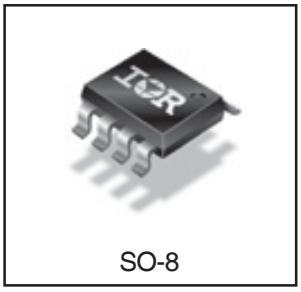


## Applications

- Charge and Discharge Switch for Notebook PC Battery Application

## Features and Benefits

| Features | | Resulting Benefits |
|---|---|---|
| Low $R_{DSon}$ (≤ 4.6mΩ) | results in ⇒ | Lower Conduction Losses |
| Industry-Standard SO8 Package | | Multi-Vendor Compatibility |
| RoHS Compliant Containing no Lead, no Bromide and no Halogen | | Environmentally Friendlier |

| Orderable part number | Package Type | Standard Pack | | Note |
|---|---|---|---|---|
| | | Form | Quantity | |
| IRF9310PbF | SO8 | Tube/Bulk | 95 | |
| IRF9310TRPbF | SO8 | Tape and Reel | 4000 | |

## Absolute Maximum Ratings

| | Parameter | Max. | Units |
|---|---|---|---|
| $V_{DS}$ | Drain-to-Source Voltage | -30 | V |
| $V_{GS}$ | Gate-to-Source Voltage | ± 20 | |
| $I_D$ @ $T_A$ = 25°C | Continuous Drain Current, $V_{GS}$ @ 10V | -20 | A |
| $I_D$ @ $T_A$ = 70°C | Continuous Drain Current, $V_{GS}$ @ 10V | -16 | |
| $I_{DM}$ | Pulsed Drain Current ① | -160 | |
| $P_D$ @$T_A$ = 25°C | Power Dissipation ④ | 2.5 | W |
| $P_D$ @$T_A$ = 70°C | Power Dissipation ④ | 1.6 | |
| | Linear Derating Factor | 0.02 | W/°C |
| $T_J$<br>$T_{STG}$ | Operating Junction and<br>Storage Temperature Range | -55 to + 150 | °C |

Notes ① through ⑤ are on page 2



03/19/2010

## Static @ $T_J$ = 25°C (unless otherwise specified)

| | Parameter | Min. | Typ. | Max. | Units | Conditions |
|---|---|---|---|---|---|---|
| $BV_{DSS}$ | Drain-to-Source Breakdown Voltage | -30 | — | — | V | $V_{GS}$ = 0V, $I_D$ = -250μA |
| $\Delta BV_{DSS}/\Delta T_J$ | Breakdown Voltage Temp. Coefficient | — | 0.020 | — | V/°C | Reference to 25°C, $I_D$ = -1mA |
| $R_{DS(on)}$ | Static Drain-to-Source On-Resistance | — | 3.9 | 4.6 | mΩ | $V_{GS}$ = -10V, $I_D$ = -20A ③ |
| | | — | 5.8 | 6.8 | | $V_{GS}$ = -4.5V, $I_D$ = -16A ③ |
| $V_{GS(th)}$ | Gate Threshold Voltage | -1.3 | -1.8 | -2.4 | V | $V_{DS}$ = $V_{GS}$, $I_D$ = -100μA |
| $\Delta V_{GS(th)}$ | Gate Threshold Voltage Coefficient | — | -5.8 | — | mV/°C | |
| $I_{DSS}$ | Drain-to-Source Leakage Current | — | — | -1.0 | μA | $V_{DS}$ = -24V, $V_{GS}$ = 0V |
| | | — | — | -150 | | $V_{DS}$ = -24V, $V_{GS}$ = 0V, $T_J$ = 125°C |
| $I_{GSS}$ | Gate-to-Source Forward Leakage | — | — | -100 | nA | $V_{GS}$ = -20V |
| | Gate-to-Source Reverse Leakage | — | — | 100 | | $V_{GS}$ = 20V |
| gfs | Forward Transconductance | 39 | — | — | S | $V_{DS}$ = -10V, $I_D$ = -16A |
| $Q_g$ | Total Gate Charge ⑥ | — | 58 | — | nC | $V_{DS}$ = -15V, $V_{GS}$ = -4.5V, $I_D$ = - 16A |
| $Q_g$ | Total Gate Charge ⑥ | — | 110 | 165 | nC | $V_{GS}$ = -10V |
| $Q_{gs}$ | Gate-to-Source Charge ⑥ | — | 17 | — | | $V_{DS}$ = -15V |
| $Q_{gd}$ | Gate-to-Drain Charge ⑥ | — | 28 | — | | $I_D$ = -16A |
| $R_G$ | Gate Resistance ⑥ | — | 2.8 | — | Ω | |
| $t_{d(on)}$ | Turn-On Delay Time | — | 25 | — | ns | $V_{DD}$ = -15V, $V_{GS}$ = -4.5V ③ |
| $t_r$ | Rise Time | — | 47 | — | | $I_D$ = -1.0A |
| $t_{d(off)}$ | Turn-Off Delay Time | — | 65 | — | | $R_G$ = 1.8Ω |
| $t_f$ | Fall Time | — | 70 | — | | See Figs. 20a &20b |
| $C_{iss}$ | Input Capacitance | — | 5250 | — | pF | $V_{GS}$ = 0V |
| $C_{oss}$ | Output Capacitance | — | 1300 | — | | $V_{DS}$ = -15V |
| $C_{rss}$ | Reverse Transfer Capacitance | — | 880 | — | | $f$ = 1.0MHz |

## Avalanche Characteristics

| | Parameter | Typ. | Max. | Units |
|---|---|---|---|---|
| $E_{AS}$ | Single Pulse Avalanche Energy ② | — | 630 | mJ |
| $I_{AR}$ | Avalanche Current ① | — | -16 | A |

## Diode Characteristics

| | Parameter | Min. | Typ. | Max. | Units | Conditions |
|---|---|---|---|---|---|---|
| $I_S$ | Continuous Source Current (Body Diode) | — | — | -2.5 | A | MOSFET symbol showing the integral reverse p-n junction diode. 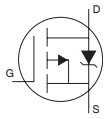 |
| $I_{SM}$ | Pulsed Source Current (Body Diode) ① | — | — | -160 | | |
| $V_{SD}$ | Diode Forward Voltage | — | — | -1.2 | V | $T_J$ = 25°C, $I_S$ = -2.5A, $V_{GS}$ = 0V ③ |
| $t_{rr}$ | Reverse Recovery Time | — | 71 | 107 | ns | $T_J$ = 25°C, $I_F$ = -2.5A, $V_{DD}$ = -24V |
| $Q_{rr}$ | Reverse Recovery Charge | — | 12 | 18 | nC | di/dt = 100A/μs ③ |

## Thermal Resistance

| | Parameter | Typ. | Max. | Units |
|---|---|---|---|---|
| $R_{\theta JL}$ | Junction-to-Drain Lead ⑤ | — | 20 | °C/W |
| $R_{\theta JA}$ | Junction-to-Ambient ④ | — | 50 | |

**Notes:**

① Repetitive rating; pulse width limited by max. junction temperature.
② Starting $T_J$ = 25°C, L = 4.9mH, $R_G$ = 25Ω, $I_{AS}$ = -16A.
③ Pulse width ≤ 400μs; duty cycle ≤ 2%.
④ When mounted on 1 inch square copper board.
⑤ $R_\theta$ is measured at $T_J$ of approximately 90°C.
⑥ For DESIGN AID ONLY, not subject to production testing.

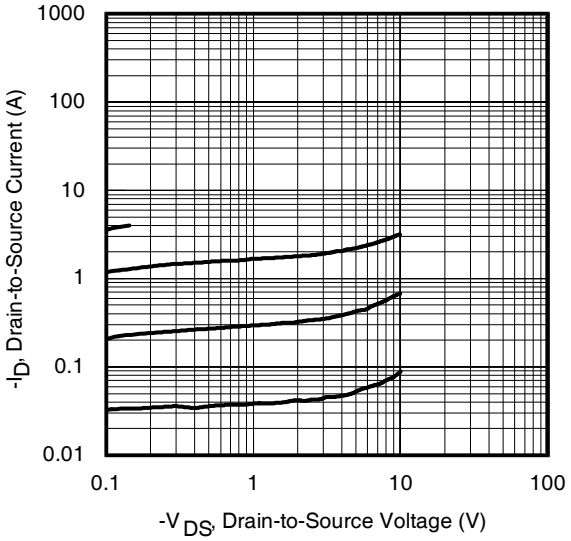


**Fig 1.** Typical Output Characteristics

**Fig 2.** Typical Output Characteristics

**Fig 3.** Typical Transfer Characteristics

**Fig 4.** Normalized On-Resistance vs. Temperature

**Fig 5.** Typical Capacitance vs.Drain-to-Source Voltage

**Fig 6.** Typical Gate Charge vs.Gate-to-Source Voltage

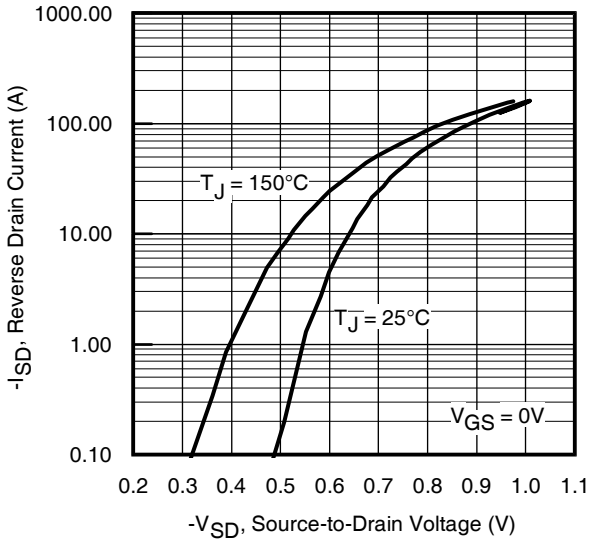


**Fig 7.** Typical Source-Drain Diode Forward Voltage

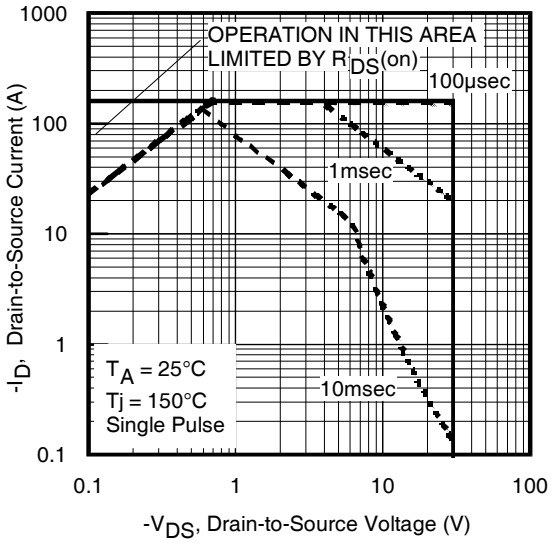


**Fig 8.** Maximum Safe Operating Area

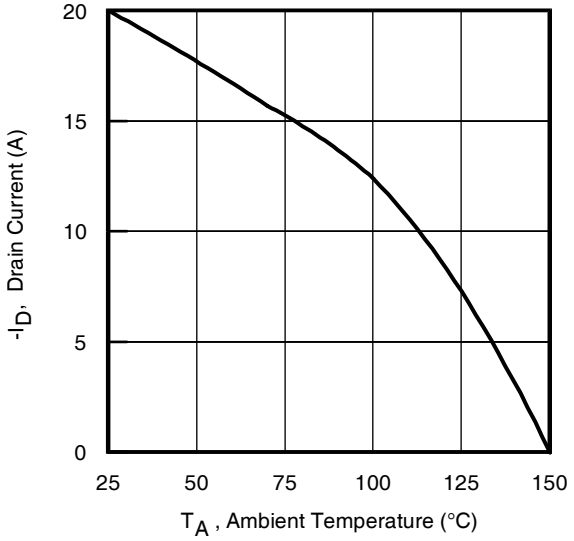


**Fig 9.** Maximum Drain Current vs. Ambient Temperature

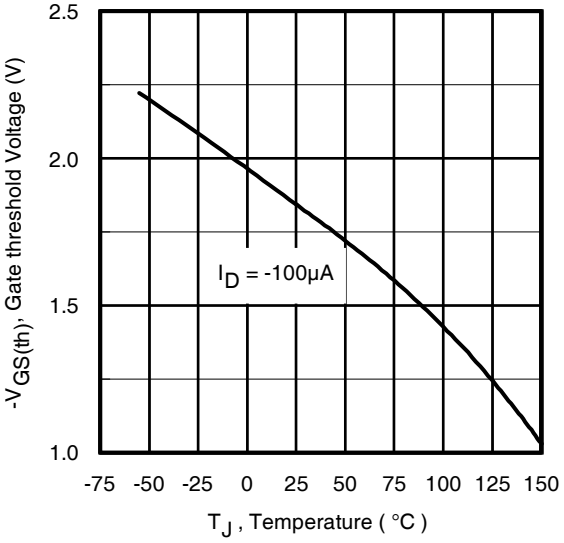


**Fig 10.** Threshold Voltage vs. Temperature

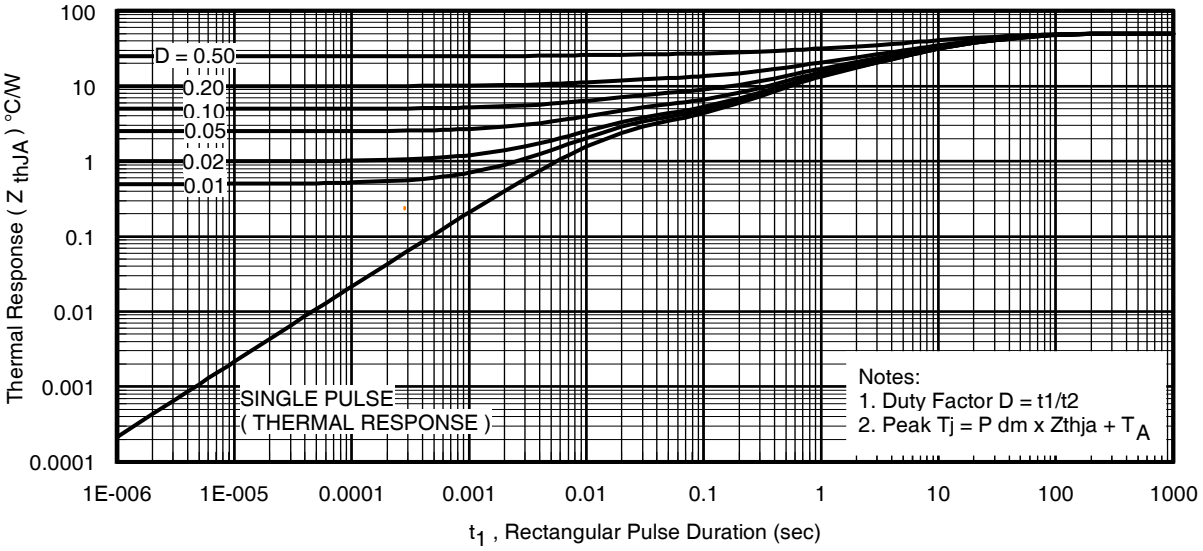


**Fig 11.** Maximum Effective Transient Thermal Impedance, Junction-to-Ambient

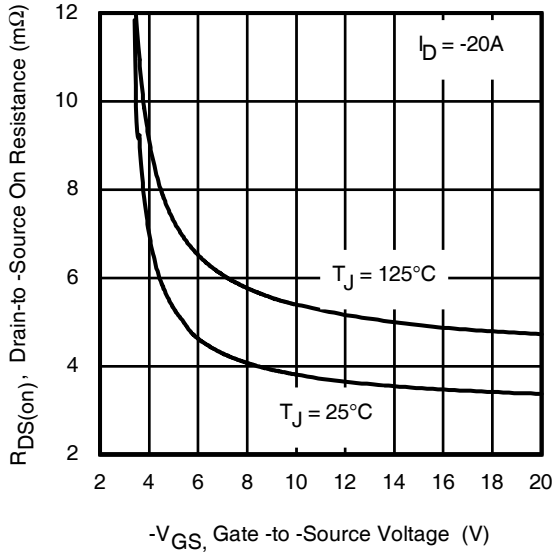


**Fig 12.** On-Resistance vs. Gate Voltage

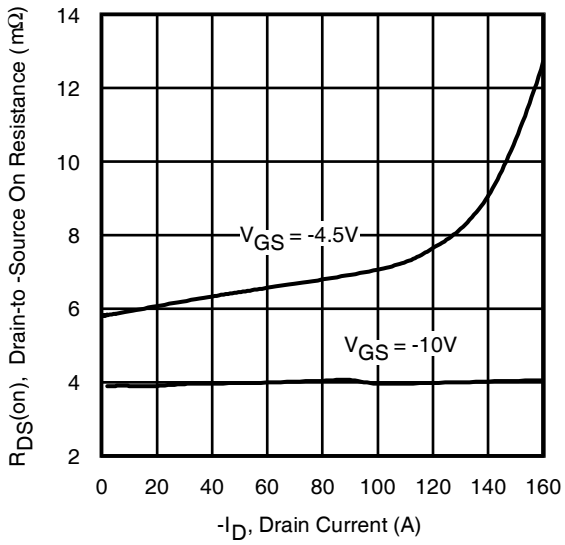


**Fig 13.** Typical On-Resistance vs. Drain Current

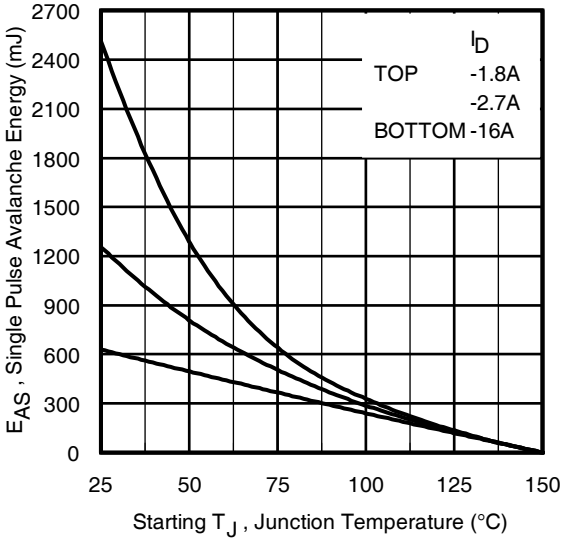


**Fig 14.** Maximum Avalanche Energy vs. Drain Current

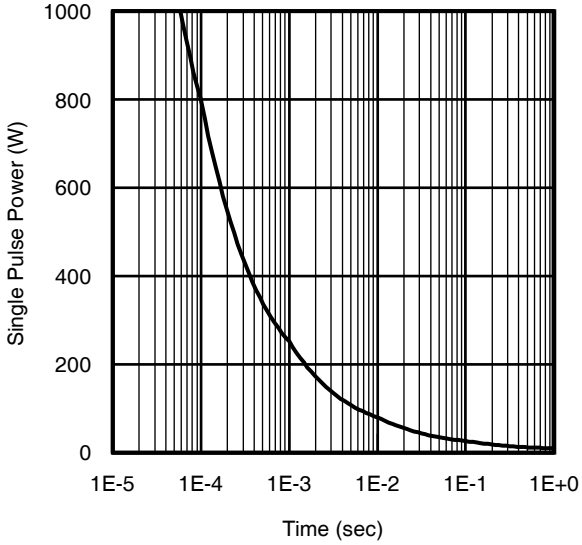


**Fig 16.** Typical Power vs. Time

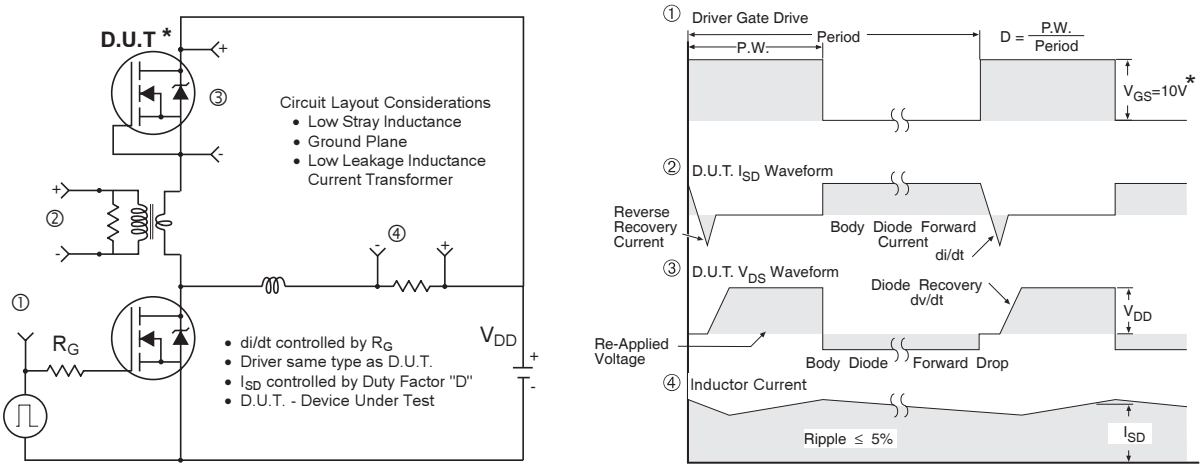


* Reverse Polarity of D.U.T for P-Channel

* $V_{GS}$ = 5V for Logic Level Devices

**Fig 17.** Diode Reverse Recovery Test Circuit for P-Channel HEXFET® Power MOSFETs

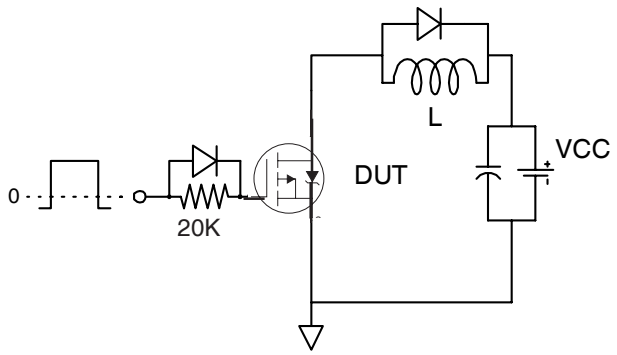


**Fig 18a.** Gate Charge Test Circuit

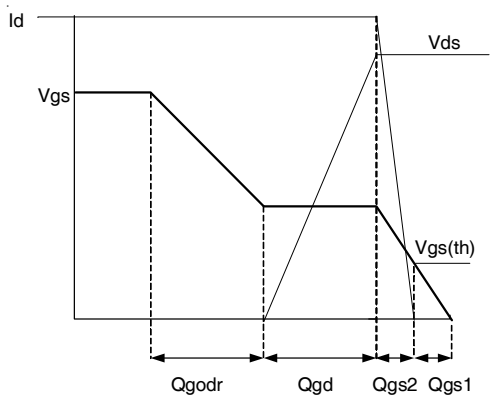


**Fig 18b.** Gate Charge Waveform

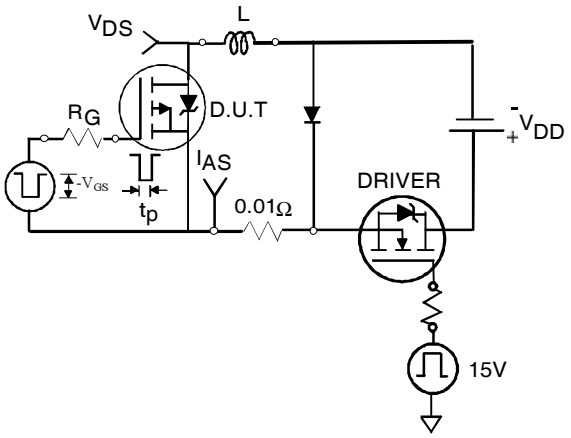


**Fig 19a.** Unclamped Inductive Test Circuit

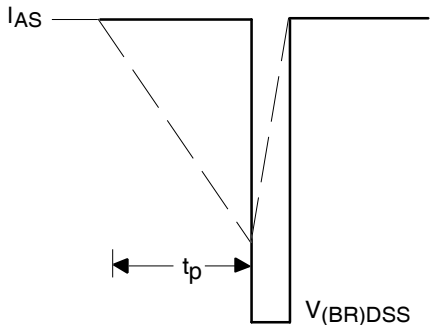


**Fig 19b.** Unclamped Inductive Waveforms

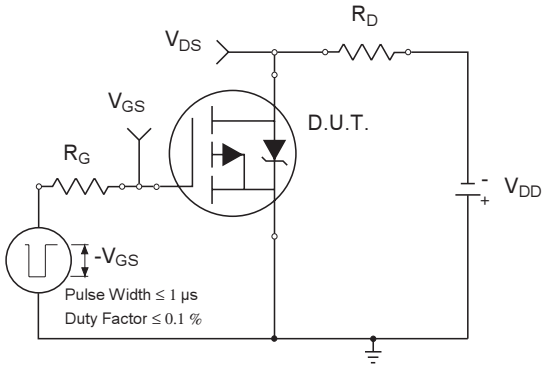


**Fig 20a.** Switching Time Test Circuit

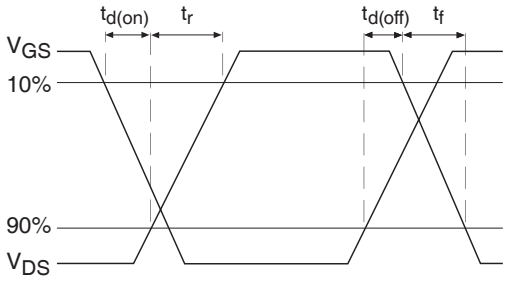


**Fig 20b.** Switching Time Waveforms

# SO-8 Package Outline(Mosfet & Fetky)

Dimensions are shown in milimeters (inches)

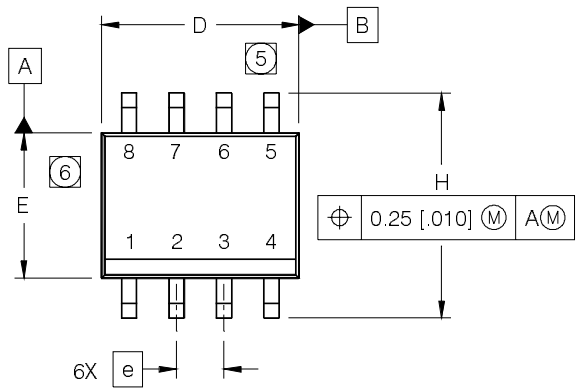


| DIM | INCHES | | MILLIMETERS | |
|---|---|---|---|---|
| | MIN | MAX | MIN | MAX |
| A | .0532 | .0688 | 1.35 | 1.75 |
| A1 | .0040 | .0098 | 0.10 | 0.25 |
| b | .013 | .020 | 0.33 | 0.51 |
| c | .0075 | .0098 | 0.19 | 0.25 |
| D | .189 | .1968 | 4.80 | 5.00 |
| E | .1497 | .1574 | 3.80 | 4.00 |
| e | .050 BASIC | | 1.27 BASIC | |
| e 1 | .025 BASIC | | 0.635 BASIC | |
| H | .2284 | .2440 | 5.80 | 6.20 |
| K | .0099 | .0196 | 0.25 | 0.50 |
| L | .016 | .050 | 0.40 | 1.27 |
| y | 0° | 8° | 0° | 8° |

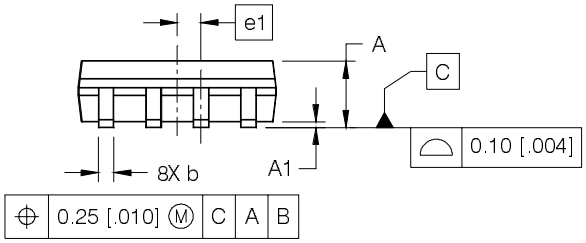


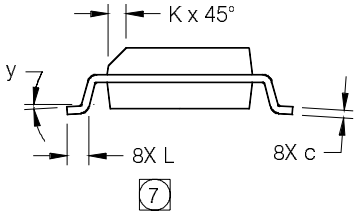


NOTES:

1. DIMENSIONING & TOLERANCING PER ASME Y14.5M-1994.
2. CONTROLLING DIMENSION: MILLIMETER
3. DIMENSIONS ARE SHOWN IN MILLIMETERS [INCHES].
4. OUTLINE CONFORMS TO JEDEC OUTLINE MS-012AA.

5. DIMENSION DOES NOT INCLUDE MOLD PROTRUSIONS. MOLD PROTRUSIONS NOT TO EXCEED 0.15 [.006].

6. DIMENSION DOES NOT INCLUDE MOLD PROTRUSIONS. MOLD PROTRUSIONS NOT TO EXCEED 0.25 [.010].

7. DIMENSION IS THE LENGTH OF LEAD FOR SOLDERING TO A SUBSTRATE.

FOOTPRINT

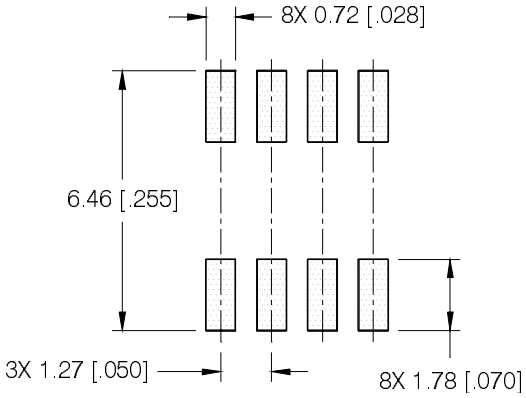


## SO-8 Part Marking Information

EXAMPLE: THIS IS AN IRF7101 (MOSFET)

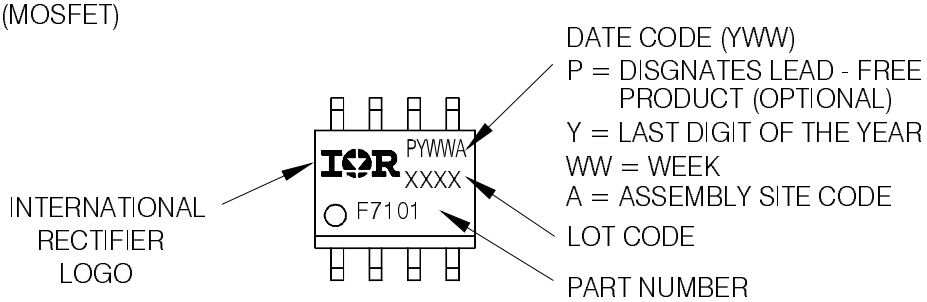


Note: For the most current drawing please refer to IR website at http://www.irf.com/package/

International
IOR Rectifier

## SO-8 Tape and Reel (Dimensions are shown in milimeters (inches))

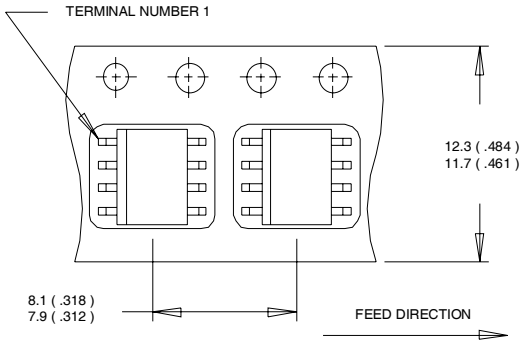


NOTES:
1. CONTROLLING DIMENSION : MILLIMETER.
2. ALL DIMENSIONS ARE SHOWN IN MILLIMETERS(INCHES).
3. OUTLINE CONFORMS TO EIA-481 & EIA-541.

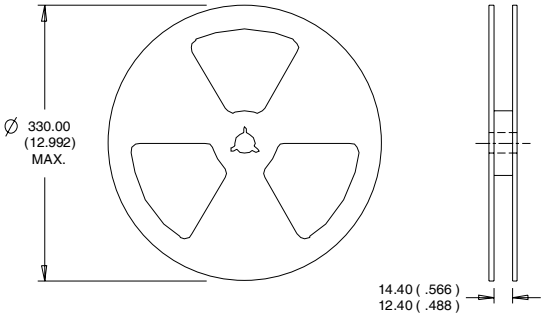


NOTES :
1. CONTROLLING DIMENSION : MILLIMETER.
2. OUTLINE CONFORMS TO EIA-481 & EIA-541.

### Qualification Information†

| | | |
|---|---|---|
| Qualification level | Consumer †† | |
| | (per JEDEC JESD47F††† guidelines) | |
| Moisture Sensitivity Level | SO-8 | MSL1<br>(per JEDEC J-STD-020D†††) |
| RoHS Compliant | Yes | |

† Qualification standards can be found at International Rectifier's web site http://www.irf.com/product-info/reliability

†† Higher qualification ratings may be available should the user have such requirements. Please contact your International Rectifier sales representative for further information: http://www.irf.com/whoto-call/salesrep/

††† Applicable version of JEDEC standard at the time of product release.

### Revision History

| Date | Comment |
|---|---|
| 3/18/2010 | Figure 16, Power vs. Time curve is modified and updated. All other parameters remain unchanged. |

Data and specifications subject to change without notice.

International
IOR Rectifier

**IR WORLD HEADQUARTERS:** 233 Kansas St., El Segundo, California 90245, USA Tel: (310) 252-7105
TAC Fax: (310) 252-7903
Visit us at www.irf.com for sales contact information.03/2010