About the wheel for FS90R
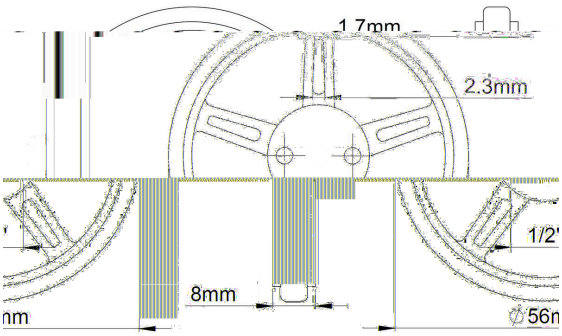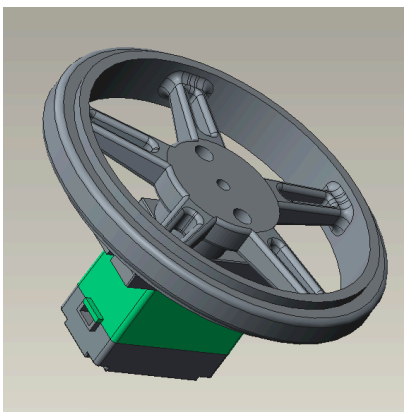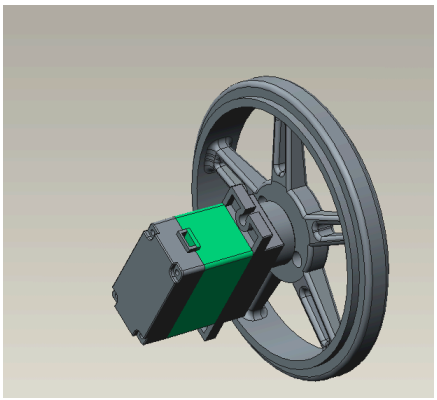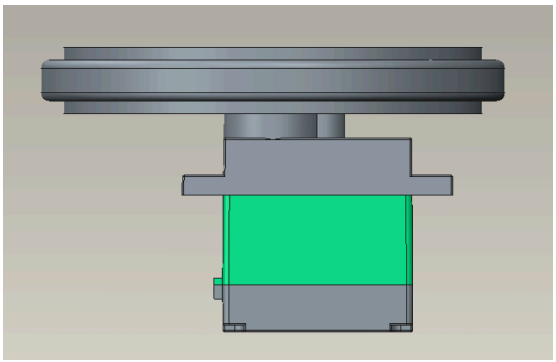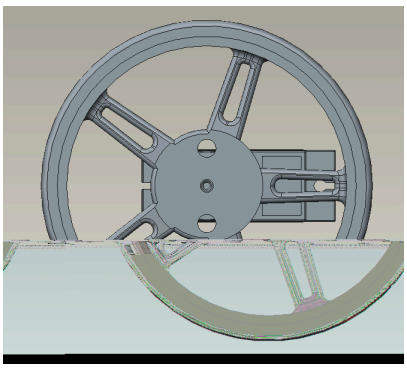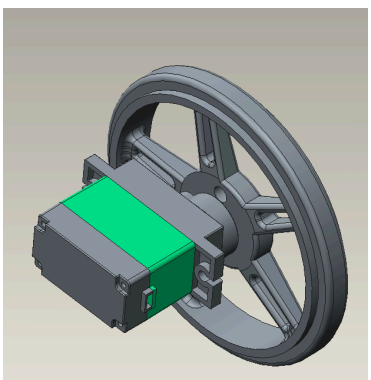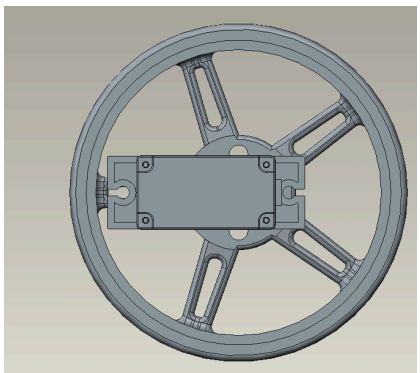
This **black** plastic wheel is press-fit onto the FS90R output gear shaft, and easy to make a nice drive solution for small robots. The wheels have silicone tires and measure **60 mm (2.36”)** in diameter. Two additional mounting holes for 3-40 screws make it possible to use the wheel with several of mounting hubs.