51.5 (W) x 30.5 (H) x 115 (L) mm

# DPS-65VB

| | | |
|---|---|---|
| Input | Voltage Range | 100~264Vac Auto Range |
| | Frequency | 47~63Hz |
| | Efficiency | The average efficiency at 25%, 50%, 75% and 100% load/115Vac 60Hz/230Vac 50Hz ≥ 88% |
| | Input Current | 100Vac /12V/2A load ≤ 2A |
| Output | 12V | 0A ~ 5.417A |
| Protection | Over-current | Auto Recovery |
| | Over-temperature | Latch-off |
| | Short | Auto Recovery |
| | Over-voltage | Latch-off |
| Environment | Operating Temp. | 0 to 40℃ |
| | Storage Temp. | -20 to 80 ℃ |
| | Operating Humidity | 20% - 80% |
| | Storage Humidity | 10% - 90% |

## FEATURES

- Total Power 65W,peak 78W for 3Sec.
- Efficiency：Meet DoE level Ⅵ
- High Reliability：＞100,000 Hours @ 25℃ ,100Vac/maximum load
- Protection：Short / Over-current / Over-voltage /Over-temperature
- Safety：CCC, CB, UL/CUL, TUV, CE, BSMI, PSE, KC, RCM, EAC, NOM, TUV-S, ANATEL, SASO, SABS, BIS, MEPS, NRCAN, meet CCC tropical standard.
- EMI：CLASS B


TA ELECTRONICS, INC.
NG YUAN ROAD, CHUNGLI
STRIAL ZONE
YUAN SHIEH, TAIWAN, R.O.C.
886-3-4526107
886-3-4527314
powersales@delta.com.tw

DELTA PRODUCTS CORPORATION
4405 CUSHING PARKWAY
FREMONT, CA 94538, U.S.A.
TEL: 1-510-668-5100
FAX: 1-510-668-0680

DELTA ELECTRONICS(JAPAN) INC.
DELTA SHIBADAIMON BLDG.
2-1-14 SHIBADAIMON, MINATO-KU,
TOKYO, 105-0012, JAPAN
TEL: 81-3-5733-1111
FAX: 81-3-5733-1211

DELTA ELECTRONICS, EUROPE LTD.
2 YOUNG PLACE KELVIN
INDUSTRIAL ESTATE EAST KILBROIDE,
GLASGOW G75 OTD, U.K.
TEL: 44-1355-588888
FAX: 44-1355-588889

The de-rating curve of ambient temperature shown as Fig.1.

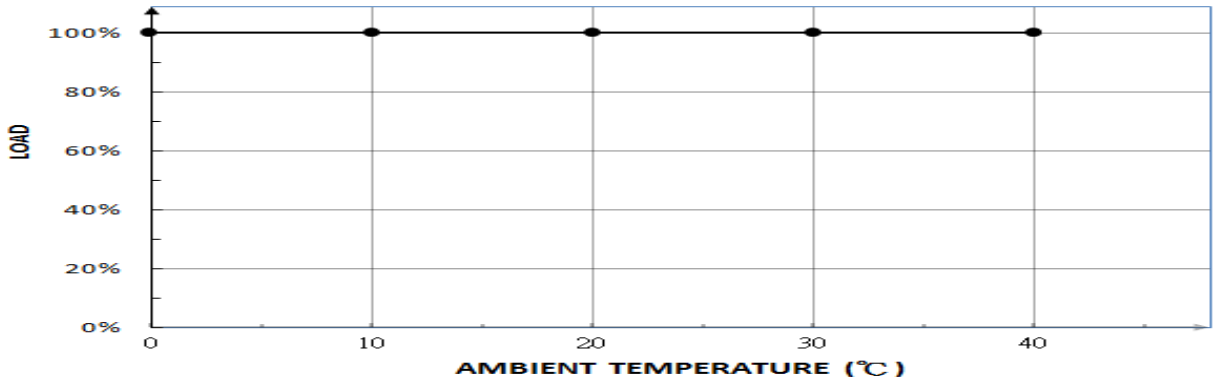


Fig.1 Ambient temperature to power de-rating curve

| | |
|---|---|
| **Size：(L x W x H)** | **115*51.5*30.5 mm** |
| **AC Input Connector** | **C14** |
| **DC Output Connector** | **TUNING FORK PLUG(2.5*5.5)** |

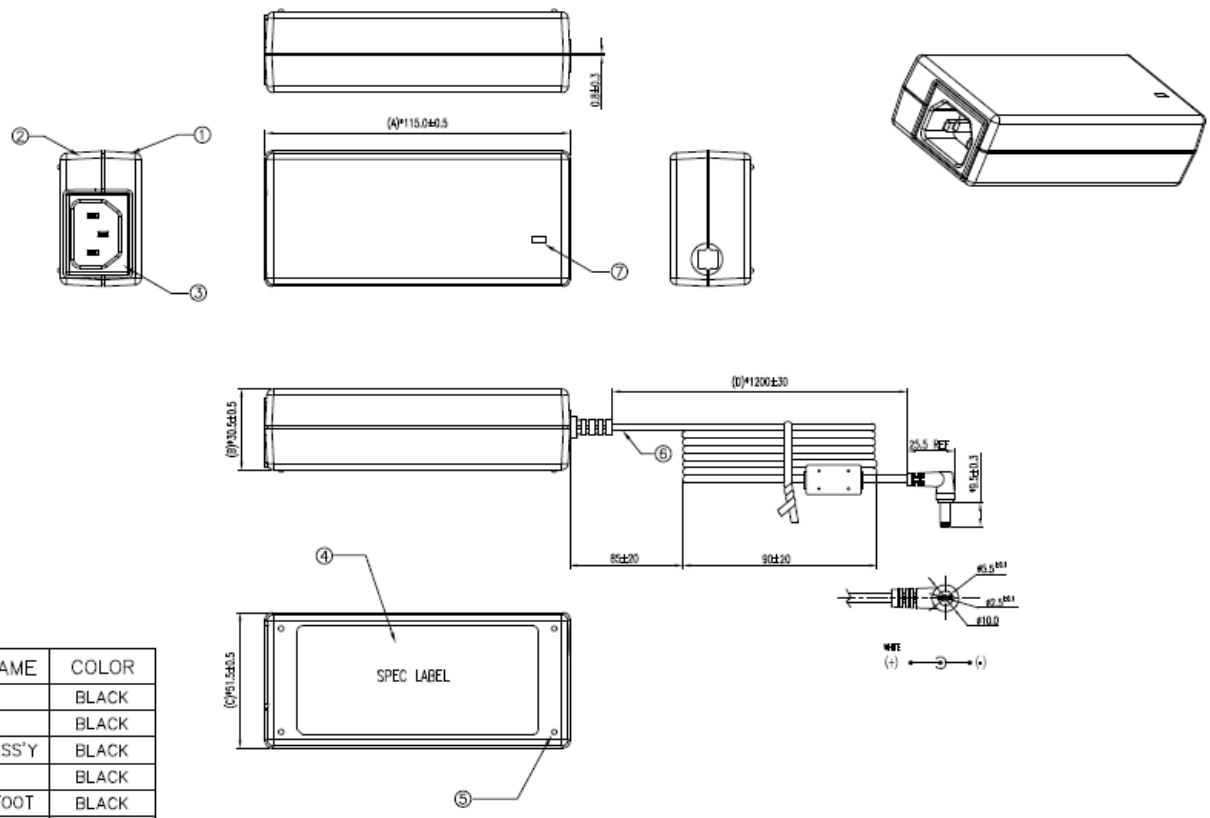


NOTES:

1.

| ITEM | PART NAME | COLOR |
|---|---|---|
| ① | CHASSIS | BLACK |
| ② | COVER | BLACK |
| ③ | SOCKET ASS'Y | BLACK |
| ④ | LABEL | BLACK |
| ⑤ | RUBBER FOOT | BLACK |
| ⑥ | POWER CORD | BLACK |
| ⑦ | LENS | CLEAR |

2. "*" IS CRITICAL DIM WHICH MUST BE MEASURED.


**DELTA ELECTRONICS, INC.**
3, TUNG YUAN ROAD, CHUNGLI
INDUSTRIAL ZONE
TAOYUAN SHIEH, TAIWAN, R.O.C.
TEL: 886-3-4526107
FAX: 886-3-4527314
mail: powersales@delta.com.tw

**DELTA PRODUCTS CORPORATION**
4405 CUSHING PARKWAY
FREMONT, CA 94538, U.S.A.
TEL: 1-510-668-5100
FAX: 1-510-668-0680

**DELTA ELECTRONICS(JAPAN) INC.**
DELTA SHIBADAIMON BLDG.
2-1-14 SHIBADAIMON, MINATO-KU,
TOKYO, 105-0012, JAPAN
TEL: 81-3-5733-1111
FAX: 81-3-5733-1211

**DELTA ELECTRONICS, EUROPE LTD.**
2 YOUNG PLACE KELVIN
INDUSTRIAL ESTATE EAST KILBROIDE,
GLASGOW G75 OTD, U.K.
TEL: 44-1355-588888
FAX: 44-1355-588889